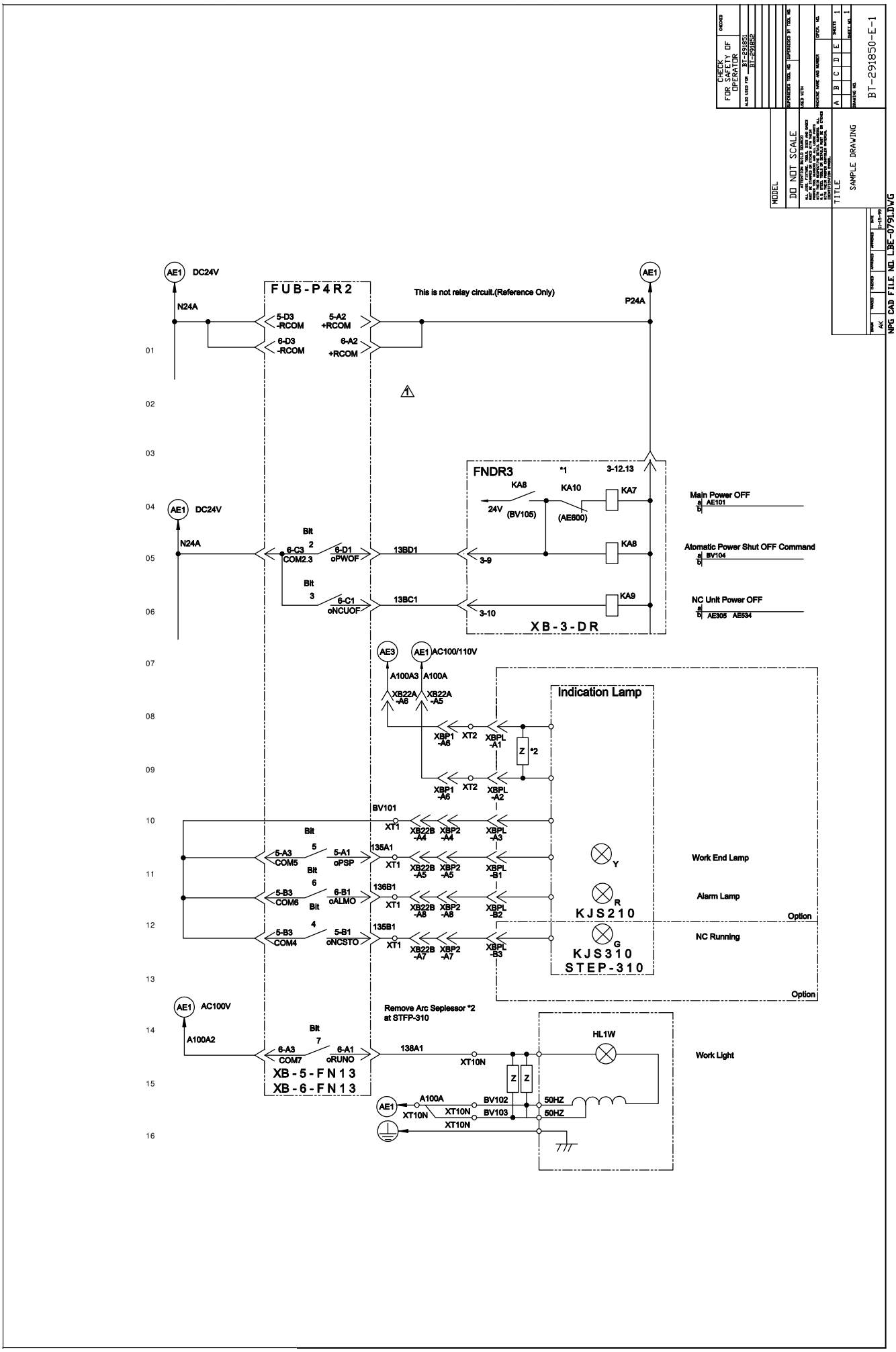

CHECK FOR SAFETY OF OPERATOR
BT-291851
BT-291852
MODEL
DO NOT SCALE
TITLE
SAMPLE DRAWING
BT-291850-E-1
NPG CAD FILE NO. LBE-0791.DWG
AE1 DC24V
N24A
FUB-P4R2
This is not relay circuit.(Reference Only)
P24A
5-D3 -RCOM
5-A2 +RCOM
6-D3 -RCOM
6-A2 +RCOM
FNDR3
*1
3-12.13
KA8
KA10
KA7
24V
(BV105)
(AE600)
Main Power OFF
AE101
Bit 2
6-C3 COM2.3
6-D1 oPWOF
13BD1
3-9
KA8
Atomatic Power Shut OFF Command
BV104
Bit 3
6-C1 oNCUOF
13BC1
3-10
KA9
NC Unit Power OFF
AE305 AE534
XB-3-DR
AE3
AE1 AC100/110V
A100A3
A100A
XB22A -A6
XB22A -A5
Indication Lamp
XBP1 -A6
XT2
XBPL -A1
Z *2
XBPL -A2
BV101
XT1
XB22B -A4
XBP2 -A4
XBPL -A3
Bit 5
5-A3 COM5
5-A1 oPSP
135A1
XB22B -A5
XBP2 -A5
XBPL -B1
Y
Work End Lamp
Bit 6
5-B3 COM6
6-B1 oALMO
136B1
XB22B -A8
XBP2 -A8
XBPL -B2
R
Alarm Lamp
KJS210
Option
Bit 4
5-B3 COM4
5-B1 oNCSTO
135B1
XB22B -A7
XBP2 -A7
XBPL -B3
G
NC Running
KJS310
STEP-310
Option
AE1 AC100V
A100A2
Remove Arc Seplessor *2 at STFP-310
Bit 7
6-A3 COM7
6-A1 oRUNO
138A1
XT10N
HL1W
Work Light
XB-5-FN13
XB-6-FN13
Z
A100A
BV102
BV103
50HZ
XT10N